4x4 Systolic Array in Complex Number

Student: Chia-Hsuan Tsai

Advisor: Chih-Feng Wu, PhD.

Department of Electronics Engineering, Chang Gung University,

Taoyuan, Taiwan (ROC)

DATE : 06/11/2025

Outline

- Introduction
  - Block Diagram
- Matlab
  - Code
  - Comparison of floating-point and fixed-point
- Timing and Structure
- Verilog
  - Code
  - Simulation
- Synthesis
  - Setting
  - Reports

Introduction

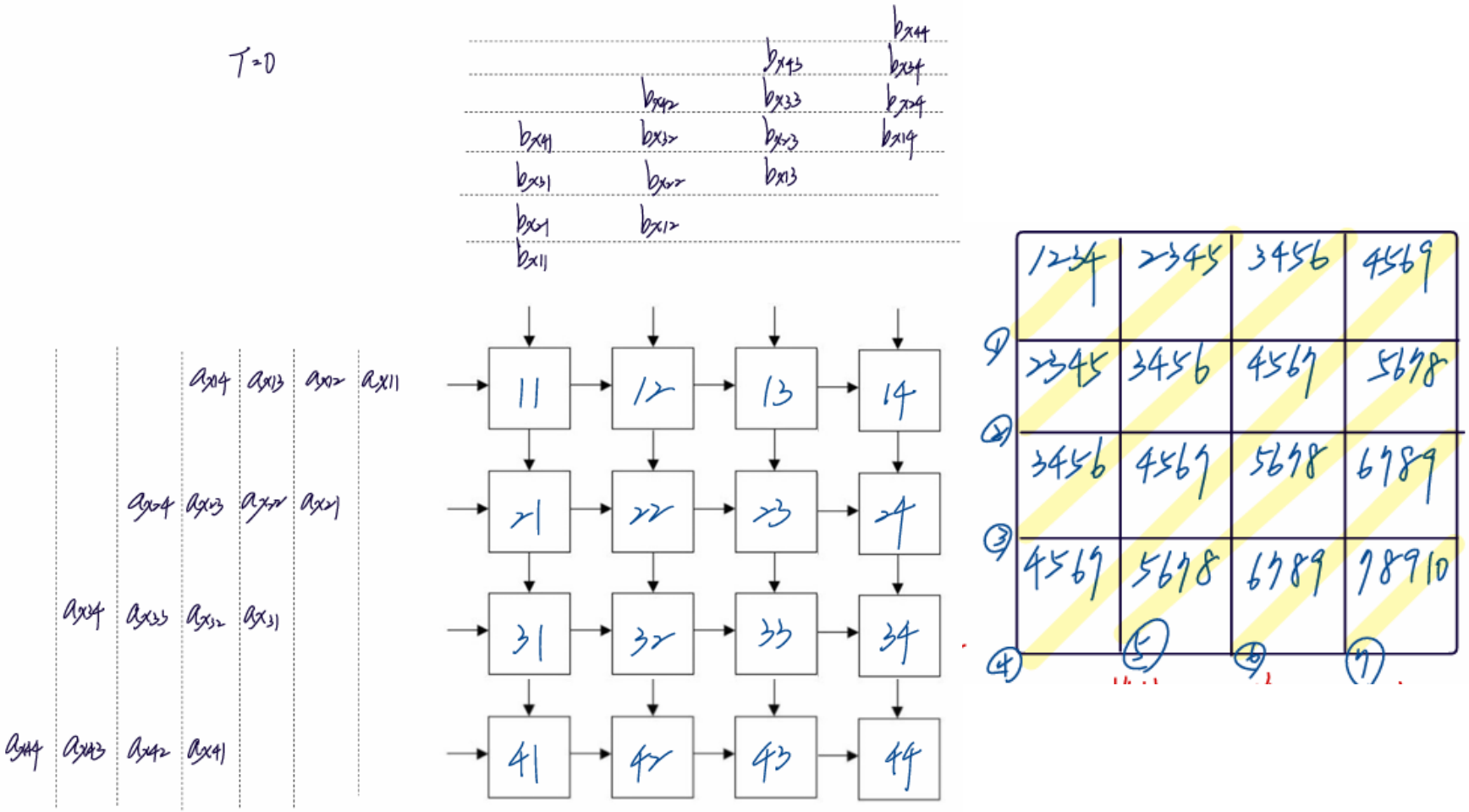

Block Diagram

- Processing Element

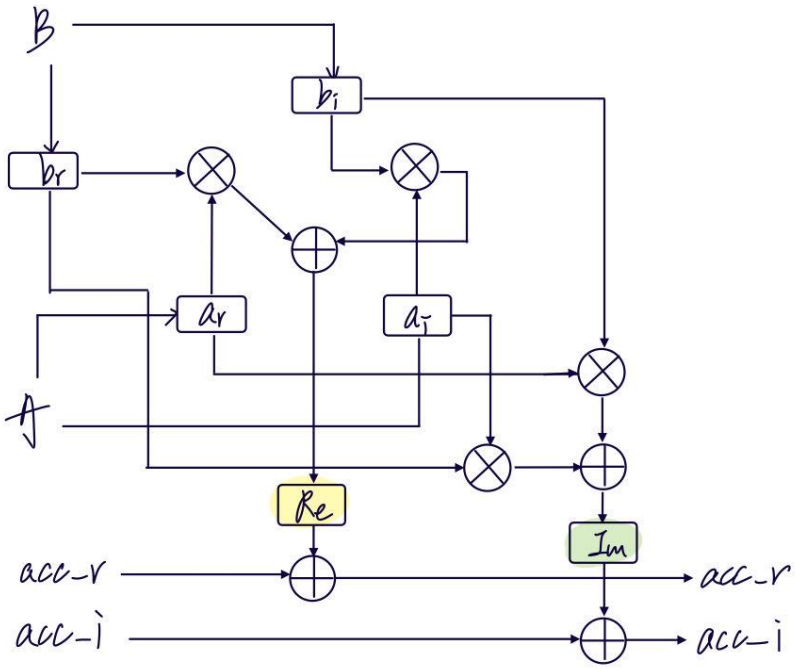

Matlab

- Fixed I/P

```
N = 4;
Num_cycles = 10;

A = rand(N,N) + 1j * rand(N,N);
B = rand(N,N) + 1j * rand(N,N);


% For test
%A = ones(4,4)+1j*zeros(4,4);
%B = ones(4,4)+1j*zeros(4,4);
P= A*B;

% range
WL_list = 0:2:32;
SQNR_stored = [];
```

```
for WL = 2:32
    for FWL = 1:WL-1
        % Fixed-point A, B
        A_fixed = sfi(A, WL, FWL);
        B_fixed = sfi(B, WL, FWL);

        %  Re & Im
        Ar = real(A_fixed); Ai = imag(A_fixed);
        Br = real(B_fixed); Bi = imag(B_fixed);

        % Initialize buffers
        a_r = zeros(N,N,Num_cycles); a_i = zeros(N,N,Num_cycles);
        b_r = zeros(N,N,Num_cycles); b_i = zeros(N,N,Num_cycles);
        acc_r = zeros(N,N,Num_cycles); acc_i = zeros(N,N,Num_cycles);
```

Matlab

- Inner loop

```
for t = 1:Num_cycles
    for row = 1:N
        for col = 1:N
            % a_r, a_i shift from left or load
            if col == 1 && (t - row + 1) >= 1 && (t - row + 1) <= N
                a_r(row, col, t) = Ar(row, t - row + 1);
                a_i(row, col, t) = Ai(row, t - row + 1);
            elseif col > 1 && t > 1
                a_r(row, col, t) = a_r(row, col - 1, t - 1);
                a_i(row, col, t) = a_i(row, col - 1, t - 1);
            end

            % b_r, b_i shift from top or load
            if row == 1 && (t - col + 1) >= 1 && (t - col + 1) <= N
                b_r(row, col, t) = Br(t - col + 1, col);
                b_i(row, col, t) = Bi(t - col + 1, col);
            elseif row > 1 && t > 1
                b_r(row, col, t) = b_r(row - 1, col, t - 1);
                b_i(row, col, t) = b_i(row - 1, col, t - 1);
            end
```

```
% Complex mult
ar = a_r(row,col,t); ai = a_i(row,col,t);
br = b_r(row,col,t); bi = b_i(row,col,t);

Re = ar * br - ai * bi;
Im = ar * bi + ai * br;

if t > 1
    acc_r(row,col,t) = acc_r(row,col,t-1) + Re;
    acc_i(row,col,t) = acc_i(row,col,t-1) + Im;
else
    acc_r(row,col,t) = Re;
    acc_i(row,col,t) = Im;
end
```

Matlab

- Fixed O/P

```
% systolic output
%sy_output = sfi(acc_r(:,:,Num_cycles),32,30) + sfi(1j * acc_i(:,:,Num_cycles),32,30)
sy_output = acc_r(:,:,Num_cycles) + 1j * acc_i(:,:,Num_cycles);
sy_output_double = double(sy_output);

% SQNR
qe = P - sy_output_double;
qe2 = norm(qe,2)^2;
SQNR_dB = 10 * log10(qe2);
SQNR_stored = [SQNR_stored; WL, FWL, SQNR_dB];
    fprintf('WL = %2d | FWL = %2d | SQNR = %.4f dB\n', ...
                    WL, FWL, SQNR_dB);
```

Matlab

- Comparison of floating-point and fixed-point

```
A = rand(N,N) + 1j * rand(N,N);
B = rand(N,N) + 1j * rand(N,N);

% For test
%A = ones(4,4)+1j*ones(4,4);
%B = ones(4,4)+1j*ones(4,4);
```

Command Window

New to MATLAB? See resources for Getting Started.

```
>> P

P =

   0.9088 + 2.2691i   1.1703 + 2.0061i   0.9270 + 1.7209i   1.1306 + 1.7564i
   0.2098 + 1.6978i   0.4700 + 1.6151i   0.4048 + 1.1728i   0.3513 + 1.4558i
  -0.0595 + 2.9728i   0.7292 + 2.4439i   0.7034 + 2.6102i   0.2316 + 2.1795i
  -0.6742 + 2.5638i   0.1256 + 1.9735i   0.1695 + 2.0675i  -0.2241 + 1.8616i

>> sy_output

sy_output =

   0.9088 + 2.2691i   1.1703 + 2.0061i   0.9270 + 1.7209i   1.1306 + 1.7564i
   0.2098 + 1.6978i   0.4700 + 1.6151i   0.4048 + 1.1728i   0.3513 + 1.4558i
  -0.0595 + 2.9728i   0.7292 + 2.4439i   0.7034 + 2.6102i   0.2316 + 2.1795i
  -0.6742 + 2.5638i   0.1256 + 1.9735i   0.1695 + 2.0675i  -0.2241 + 1.8616i
```

```
for stage = 1:2*N-1

    switch stage
        case 1
            this_WL = WL_1; this_FWL = FWL_1;
```

Command Window

New to MATLAB? See resources for Getting Started.

```
>> SQNR_dB

SQNR_dB =

   67.4876

>> P

P =

  -0.3110 + 1.6492i  -0.9281 + 1.7499i  -0.0929 + 1.3745i  -0.4687 + 1.5312i
  -0.0153 + 0.9846i  -0.4488 + 1.1746i   0.2524 + 0.9450i  -0.1232 + 1.1437i
  -0.0164 + 1.9403i   0.0202 + 1.9771i   0.1433 + 1.6475i   0.1976 + 1.7380i
   0.2298 + 2.3351i  -0.4563 + 2.3761i   0.5014 + 2.3100i  -0.0182 + 2.3126i

>> sy_output

sy_output =

  -0.3110 + 1.6499i  -0.9287 + 1.7500i  -0.0933 + 1.3745i  -0.4688 + 1.5320i
  -0.0161 + 0.9854i  -0.4497 + 1.1753i   0.2512 + 0.9448i  -0.1240 + 1.1440i
  -0.0161 + 1.9409i   0.0193 + 1.9780i   0.1436 + 1.6479i   0.1982 + 1.7388i
   0.2300 + 2.3354i  -0.4565 + 2.3765i   0.5010 + 2.3105i  -0.0181 + 2.3135i
```

Matlab

- Fixed-stage

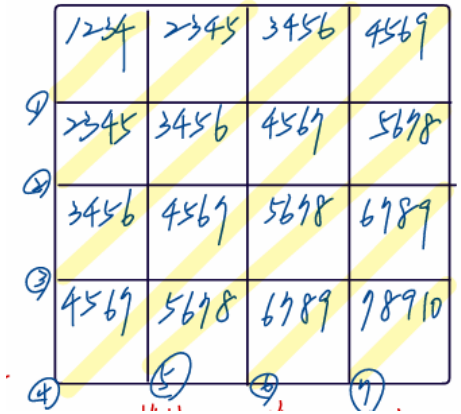


```
N = 4;
Num_cycles = 10;
A = rand(N,N) + 1j * rand(N,N);
B = rand(N,N) + 1j * rand(N,N);
P = A * B;

% Fix bits
WL_IP = 12; FWL_IP = 10;
WL_OP = 14; FWL_OP = 11;
WL_1 = 14; FWL_1 = 11;
WL_2 = 14; FWL_2 = 11;
WL_3 = 14; FWL_3 = 11;
WL_4 = 15; FWL_4 = 12;
WL_5 = 14; FWL_5 = 11;
WL_6 = 14; FWL_6 = 11;
WL_7 = 14; FWL_7 = 11;
```

```
% Fixed-point I/P
A_fixed = sfi(A, WL_IP, FWL_IP);
B_fixed = sfi(B, WL_IP, FWL_IP);
Ar = real(A_fixed); Ai = imag(A_fixed);
Br = real(B_fixed); Bi = imag(B_fixed);

% PU分stage
PU_stage = zeros(N,N);
for row = 1:N
    for col = 1:N
        PU_stage(row,col) = row + col - 1;
    end
end
for stage = 1:2*N-1

    switch stage
        case 1
            this_WL = WL_1; this_FWL = FWL_1;
        case 2
            this_WL = WL_2; this_FWL = FWL_2;
        case 3
            this_WL = WL_3; this_FWL = FWL_3;
        case 4
            this_WL = WL_4; this_FWL = FWL_4;
        case 5
            this_WL = WL_5; this_FWL = FWL_5;
        case 6
            this_WL = WL_6; this_FWL = FWL_6;
        case 7
            this_WL = WL_7; this_FWL = FWL_7;
    end
```

Matlab

- Fixed-stage

```
            pu_s = PU_stage(row, col);
            eval(sprintf('this_WL = WL_%d; this_FWL = FWL_%d;', pu_s, pu_s));

            ar_fix = sfi(ar, this_WL, this_FWL);
            ai_fix = sfi(ai, this_WL, this_FWL);
            br_fix = sfi(br, this_WL, this_FWL);
            bi_fix = sfi(bi, this_WL, this_FWL);

            Re = ar_fix * br_fix - ai_fix * bi_fix;
            Im = ar_fix * bi_fix + ai_fix * br_fix;

            if t == 1
                acc_r(row,col,t) = sfi(Re, this_WL, this_FWL);
                acc_i(row,col,t) = sfi(Im, this_WL, this_FWL);
            elseif t > 1
                acc_r(row,col,t) = sfi(acc_r(row,col,t-1), this_WL, this_FWL) + sfi(Re, this_WL, this_FWL);
                acc_i(row,col,t) = sfi(acc_i(row,col,t-1), this_WL, this_FWL) + sfi(Im, this_WL, this_FWL);
            end

        end
    end
end
```

```
    sy_output= acc_r(:,:,Num_cycles) + 1j * acc_i(:,:,Num_cycles);
    sy_output_fixed = sfi(sy_output,WL_OP,FWL_OP);
    sy_output_double = double(sy_output_fixed);
    qe = P - sy_output_double;
    qe2 = norm(qe)^2;
    SQNR_dB = 10 * log10(norm(P)^2 / qe2);
```

Matlab

- Fixed-stage

Editor - C:\Users\17\碩班\OneDrive - 長庚大學\Lab2\fix_all.m

testcr.m | cordic_number_of_iteration_test.m | Rayleigh_all.m | Alamouti.m | systolic_4x1.m

```
clear;
clc;

N = 4;
Num_cycles = 10;
A = rand(N,N) + 1j * rand(N,N);
B = rand(N,N) + 1j * rand(N,N);
P = A * B;

% Fix bits
WL_IP = 15; FWL_IP = 13;
WL_OP = 14; FWL_OP = 11;
WL_1 = 15; FWL_1 = 12;
WL_2 = 15; FWL_2 = 12;
WL_3 = 15; FWL_3 = 12;
WL_4 = 15; FWL_4 = 12;
WL_5 = 16; FWL_5 = 13;
WL_6 = 16; FWL_6 = 13;
WL_7 = 16; FWL_7 = 13;

% Fixed-point I/P
A_fixed = sfi(A, WL_IP, FWL_IP);
B_fixed = sfi(B, WL_IP, FWL_IP);
```

Command Window

New to MATLAB? See resources for Getting Started.

```
>> SQNR_dB

SQNR_dB =

   67.9433

>>
```

neDrive - 長庚大學 ▸ Lab2 ▸

Editor - C:\Users\17\碩班\OneDrive - 長庚大學\Lab2\fix_PU.m

testcr.m | cordic_number_of_iteration_test.m | Rayleigh_all.m | Alamouti.m | systolic_4x1.m

```
                    end
                end
            end

            sy_output = sfi(acc_r(:,:,Num_cycles),WL,
            sy_output_double = double(sy_output);
            noise_power = norm(P - sy_output_double)^
            SQNR_dB = 10 * log10(1 / noise_power);
            SQNR_stored = [SQNR_stored; WL, FWL, SQNR
            fprintf('Stage now = %d | WL = %2d | FWL
                                stage, WL, FWL, SQNR_dB);
        end
    end

end
```

Command Window

New to MATLAB? See resources for Getting Started.

```
Stage now = 7 | WL = 32 | FWL =  6 | SQNR = 28.0492 dB
Stage now = 7 | WL = 32 | FWL =  7 | SQNR = 33.5814 dB
Stage now = 7 | WL = 32 | FWL =  8 | SQNR = 40.4285 dB
Stage now = 7 | WL = 32 | FWL =  9 | SQNR = 44.9956 dB
Stage now = 7 | WL = 32 | FWL = 10 | SQNR = 52.1293 dB
Stage now = 7 | WL = 32 | FWL = 11 | SQNR = 56.4739 dB
Stage now = 7 | WL = 32 | FWL = 12 | SQNR = 64.6157 dB
Stage now = 7 | WL = 32 | FWL = 13 | SQNR = 66.9991 dB
Stage now = 7 | WL = 32 | FWL = 14 | SQNR = 73.4502 dB
Stage now = 7 | WL = 32 | FWL = 15 | SQNR = 73.9671 dB
Stage now = 7 | WL = 32 | FWL = 16 | SQNR = 74.6985 dB
Stage now = 7 | WL = 32 | FWL = 17 | SQNR = 74.8504 dB
Stage now = 7 | WL = 32 | FWL = 18 | SQNR = 74.9406 dB
Stage now = 7 | WL = 32 | FWL = 19 | SQNR = 75.0354 dB
Stage now = 7 | WL = 32 | FWL = 20 | SQNR = 74.9230 dB
Stage now = 7 | WL = 32 | FWL = 21 | SQNR = 74.9406 dB
Stage now = 7 | WL = 32 | FWL = 22 | SQNR = 74.9565 dB
Stage now = 7 | WL = 32 | FWL = 23 | SQNR = 74.9423 dB
Stage now = 7 | WL = 32 | FWL = 24 | SQNR = 74.9468 dB
Stage now = 7 | WL = 32 | FWL = 25 | SQNR = 74.9452 dB
```

Timing and Structure

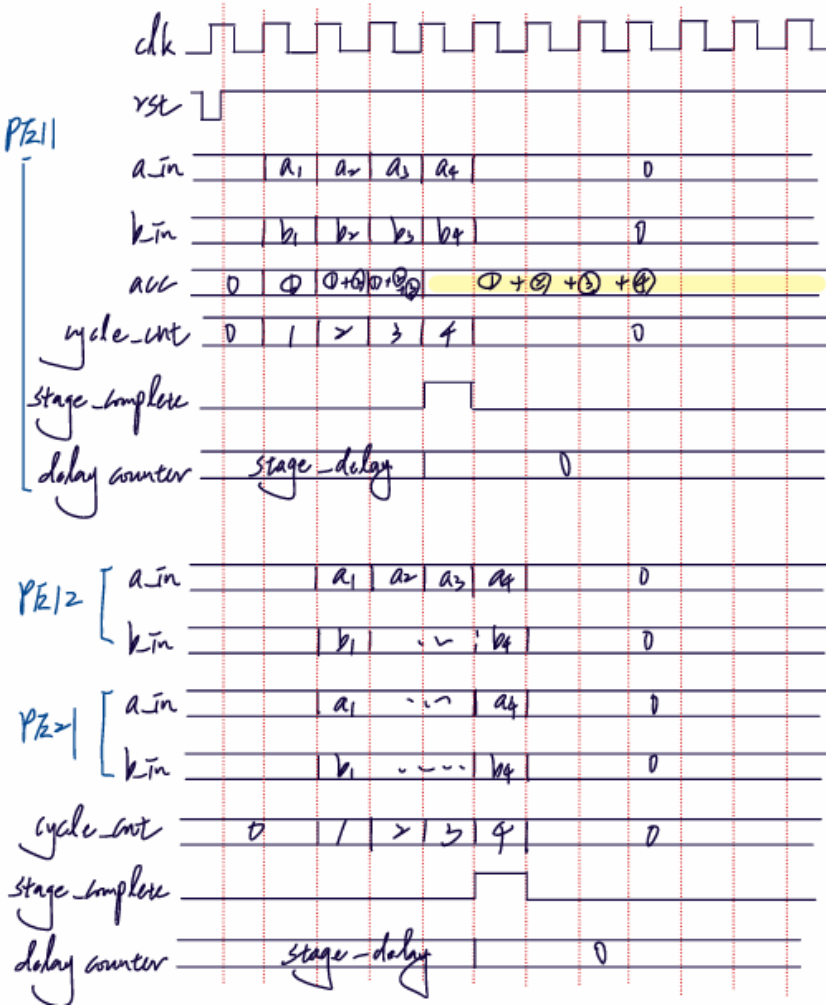

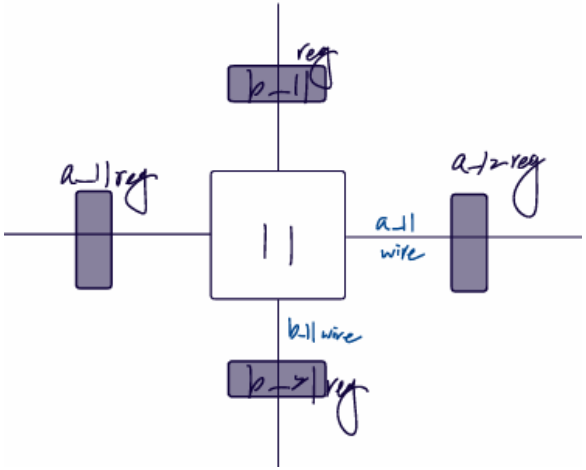

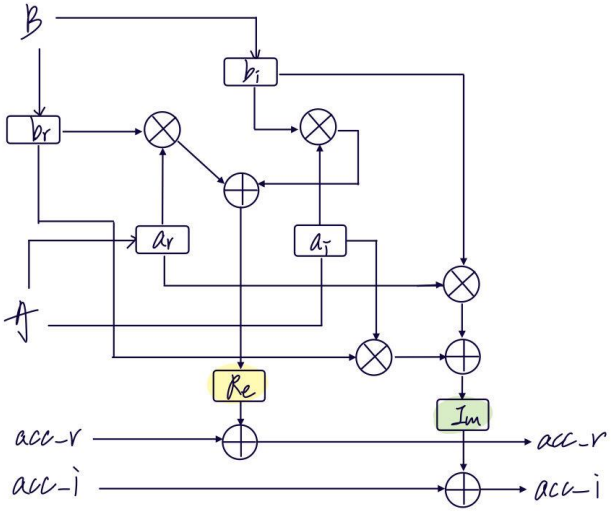

Verilog

- Systolic_rtl

```
// Systolic Array Module
module systolic (…
);

    // Stage 1: PU(1,1)
    wire signed [`WL_1-1:0] acc_r_11, acc_i_11;

    // Stage 2: PU(1,2), PU(2,1)
    wire signed [`WL_2-1:0] acc_r_12, acc_i_12;
    wire signed [`WL_2-1:0] acc_r_21, acc_i_21;

    // Stage 3: PU(1,3), PU(2,2), PU(3,1)
    wire signed [`WL_3-1:0] acc_r_13, acc_i_13;
```

```
    // wire out for connact with PE and reg
    wire signed [`WL_IP-1:0] ar_11, ai_11, br_11, bi_11;
    wire signed [`WL_IP-1:0] ar_21, ai_21, br_21, bi_21;
    wire signed [`WL_IP-1:0] ar_31, ai_31, br_31, bi_31;
    wire signed [`WL_IP-1:0] ar_41, ai_41, br_41, bi_41;

    wire signed [`WL_IP-1:0] ar_12, ai_12, br_12, bi_12;
```

```
    // reg for bypass
    reg signed [`WL_IP-1:0] ar_11_reg, ai_11_reg, br_11_reg, bi_11_reg;
    reg signed [`WL_IP-1:0] ar_21_reg, ai_21_reg, br_21_reg, bi_21_reg;
    reg signed [`WL_IP-1:0] ar_31_reg, ai_31_reg, br_31_reg, bi_31_reg;
    reg signed [`WL_IP-1:0] ar_41_reg, ai_41_reg, br_41_reg, bi_41_reg;
    reg signed [`WL_IP-1:0] ar_12_reg, ai_12_reg, br_12_reg, bi_12_reg;
```

Verilog

- Systolic_rtl

```
// data flow control
always @(posedge clk or negedge rst) begin
    if (!rst) begin…

    end else begin
        if (cycle_cnt == 0) begin
            cnt_enab <= 1;
        end

        if (cnt_enab) begin
            cycle_cnt <= cycle_cnt + 1;

            case (cycle_cnt)
                1:begin
                    ar_11_reg <= A_real_in_11;
                    ai_11_reg <= A_imag_in_11;
                    br_11_reg <= B_real_in_11;
                    bi_11_reg <= B_imag_in_11;

                    ar_21_reg <= 0;
                    ai_21_reg <= 0;

                    br_12_reg <= 0;
```

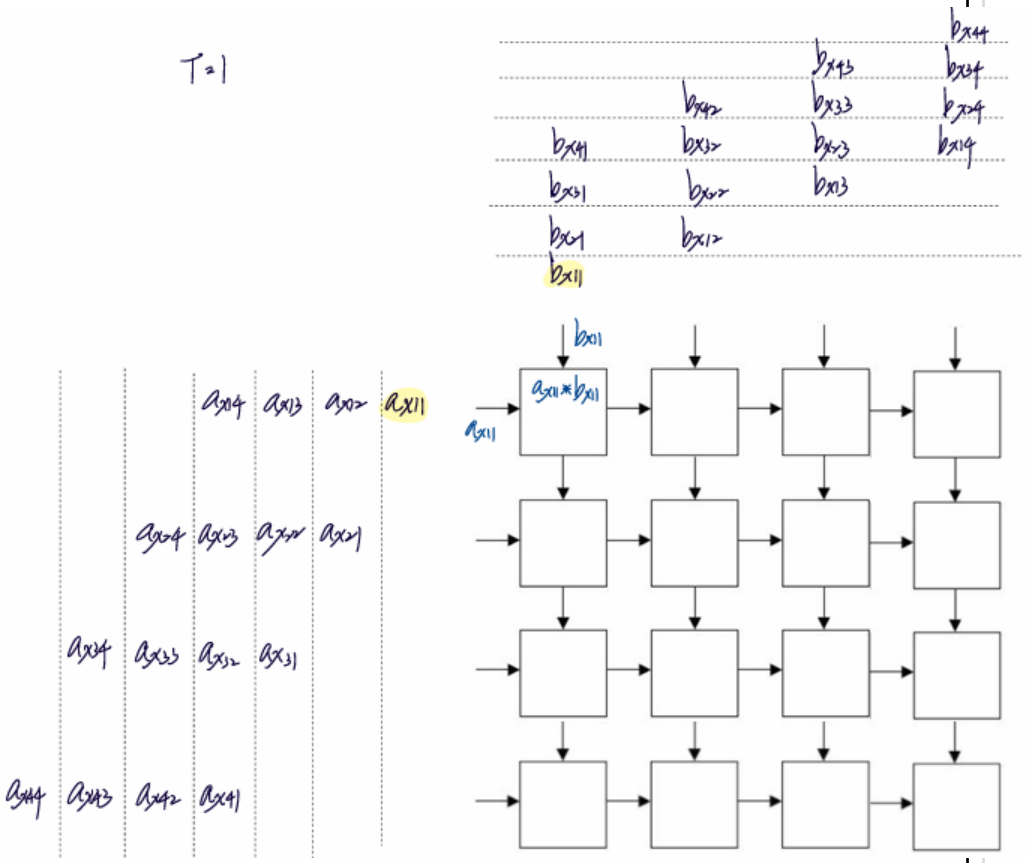

Verilog

- Systolic_rtl

```
PE #(
    .WL_IN(`WL_IP), .FWL_IN(`FWL_IP),
    .WL_OUT(`WL_1), .FWL_OUT(`FWL_1),
    .STAGE_DELAY(0)
) pe_11 (
    .clk(clk),
    .rst(rst),
    .ar_in(ar_11_reg),
    .ai_in(ai_11_reg),
    .br_in(br_11_reg),
    .bi_in(bi_11_reg),
    .ar_out(ar_11),
    .ai_out(ai_11),
    .br_out(br_11),
    .bi_out(bi_11),
    .acc_r(acc_r_11),
    .acc_i(acc_i_11)
);

always @(*) begin
    ar_12_reg = ar_11;
    ai_12_reg  = ai_11;
    br_21_reg  = br_11;
    bi_21_reg  = bi_11;
end
```

```
// O/P
assign C_real_out_11 = acc_r_11;
assign C_imag_out_11 = acc_i_11;
assign C_real_out_12 = acc_r_12;
assign C_imag_out_12 = acc_i_12;
assign C_real_out_13 = acc_r_13;
assign C_imag_out_13 = acc_i_13;
assign C_real_out_14 = acc_r_14;
assign C_imag_out_14 = acc_i_14;
```

Verilog

- PE

```
module PE #(
    parameter WL_IN = 12,
    parameter FWL_IN = 10,
    parameter WL_OUT = 14,
    parameter FWL_OUT = 11,
    parameter STAGE_DELAY = 0 // systolic stage delay
)(
    input wire clk,
    input wire rst,

    input wire signed [WL_IN-1:0] ar_in,
    input wire signed [WL_IN-1:0] ai_in,
```

```
    assign arxbr = ar_in * br_in;
    assign arxbi = ar_in * bi_in;
    assign aixbr = ai_in * br_in;
    assign aixbi = ai_in * bi_in;

    wire [3:0] IP_diff;
    assign IP_diff = (`FWL_IP > FWL_IN)? (`FWL_IP - FWL_IN) : (FWL_IN - `FWL_IP);

    // Scaled result (real/imag) after fixed-point multiplication
    wire signed [WL_OUT+WL_OUT-1:0] re_mult, im_mult;
    assign re_mult = (arxbr - aixbi) >>> (IP_diff + FWL_IN + FWL_IN - FWL_OUT);
    assign im_mult = (arxbi + aixbr) >>> (IP_diff + FWL_IN + FWL_IN - FWL_OUT);
```

Verilog

- PE

```verilog
    // Internal counters
    wire [3:0] delay_counter;
    reg [3:0] compute_counter;
    reg [3:0] cycle_count;
    //reg compute_done;
    wire start_compute;
    wire input_zero;
    wire stage_complete;

    assign input_zero = (ar_in == 0) && (ai_in == 0) && (br_in == 0) && (bi_in == 0);
    assign start_compute = (!input_zero)? 1: 0;
    assign stage_complete = (cycle_count == 4)? 1 : 0 ;  // 每4個cycle完成一個stage

    // delay_counter
    assign delay_counter = (stage_complete)? 0 : STAGE_DELAY;
```

```verilog
    // Delay control for systolic wave
    if (delay_counter == STAGE_DELAY) begin
        if (start_compute) begin
            if (cycle_count == 0) begin
                acc_r <= re_mult;
                acc_i <= im_mult;
                compute_counter <= 1;
                cycle_count <= 1;
            end else begin
                acc_r <= acc_r + re_mult;
                acc_i <= acc_i + im_mult;
                compute_counter <= compute_counter + 1;
                cycle_count <= cycle_count + 1;
            end

        end else begin
            // 保持最終結果
            acc_r <= acc_r;
            acc_i <= acc_i;
            compute_counter <= 0;
            cycle_count <= 0;
        end
    end
```

Vcs Result in int Test

- I/P = (1+j1)

```
A[0][0] = 1.000000 + j1.000000
A[0][1] = 1.000000 + j1.000000
A[0][2] = 1.000000 + j1.000000
A[0][3] = 1.000000 + j1.000000
A[1][0] = 1.000000 + j1.000000
A[1][1] = 1.000000 + j1.000000
A[1][2] = 1.000000 + j1.000000
A[1][3] = 1.000000 + j1.000000
A[2][0] = 1.000000 + j1.000000
A[2][1] = 1.000000 + j1.000000
A[2][2] = 1.000000 + j1.000000
A[2][3] = 1.000000 + j1.000000
A[3][0] = 1.000000 + j1.000000
A[3][1] = 1.000000 + j1.000000
A[3][2] = 1.000000 + j1.000000
A[3][3] = 1.000000 + j1.000000
```

```
B[0][0] = 1.000000 + j1.000000
B[0][1] = 1.000000 + j1.000000
B[0][2] = 1.000000 + j1.000000
B[0][3] = 1.000000 + j1.000000
B[1][0] = 1.000000 + j1.000000
B[1][1] = 1.000000 + j1.000000
B[1][2] = 1.000000 + j1.000000
B[1][3] = 1.000000 + j1.000000
B[2][0] = 1.000000 + j1.000000
B[2][1] = 1.000000 + j1.000000
B[2][2] = 1.000000 + j1.000000
B[2][3] = 1.000000 + j1.000000
B[3][0] = 1.000000 + j1.000000
B[3][1] = 1.000000 + j1.000000
B[3][2] = 1.000000 + j1.000000
B[3][3] = 1.000000 + j1.000000
```

- O/P = (1+j1)* (1+j1) = 0+j8

```
=== Output Comparison ===
C[0][0] = 0.000000 + j8.000000, Expected = 0.000000 + j8.000000
C[0][1] = 0.000000 + j8.000000, Expected = 0.000000 + j8.000000
C[0][2] = 0.000000 + j8.000000, Expected = 0.000000 + j8.000000
C[0][3] = 0.000000 + j8.000000, Expected = 0.000000 + j8.000000
C[1][0] = 0.000000 + j8.000000, Expected = 0.000000 + j8.000000
C[1][1] = 0.000000 + j8.000000, Expected = 0.000000 + j8.000000
C[1][2] = 0.000000 + j8.000000, Expected = 0.000000 + j8.000000
C[1][3] = 0.000000 + j8.000000, Expected = 0.000000 + j8.000000
C[2][0] = 0.000000 + j8.000000, Expected = 0.000000 + j8.000000
C[2][1] = 0.000000 + j8.000000, Expected = 0.000000 + j8.000000
C[2][2] = 0.000000 + j8.000000, Expected = 0.000000 + j8.000000
C[2][3] = 0.000000 + j8.000000, Expected = 0.000000 + j8.000000
C[3][0] = 0.000000 + j8.000000, Expected = 0.000000 + j8.000000
C[3][1] = 0.000000 + j8.000000, Expected = 0.000000 + j8.000000
C[3][2] = 0.000000 + j8.000000, Expected = 0.000000 + j8.000000
C[3][3] = 0.000000 + j8.000000, Expected = 0.000000 + j8.000000
Total Errors = 0
$finish called from file "systolic_rtb.v", line 198.
$finish at simulation time              1015000
```

Vcs Result in int Test- Timing

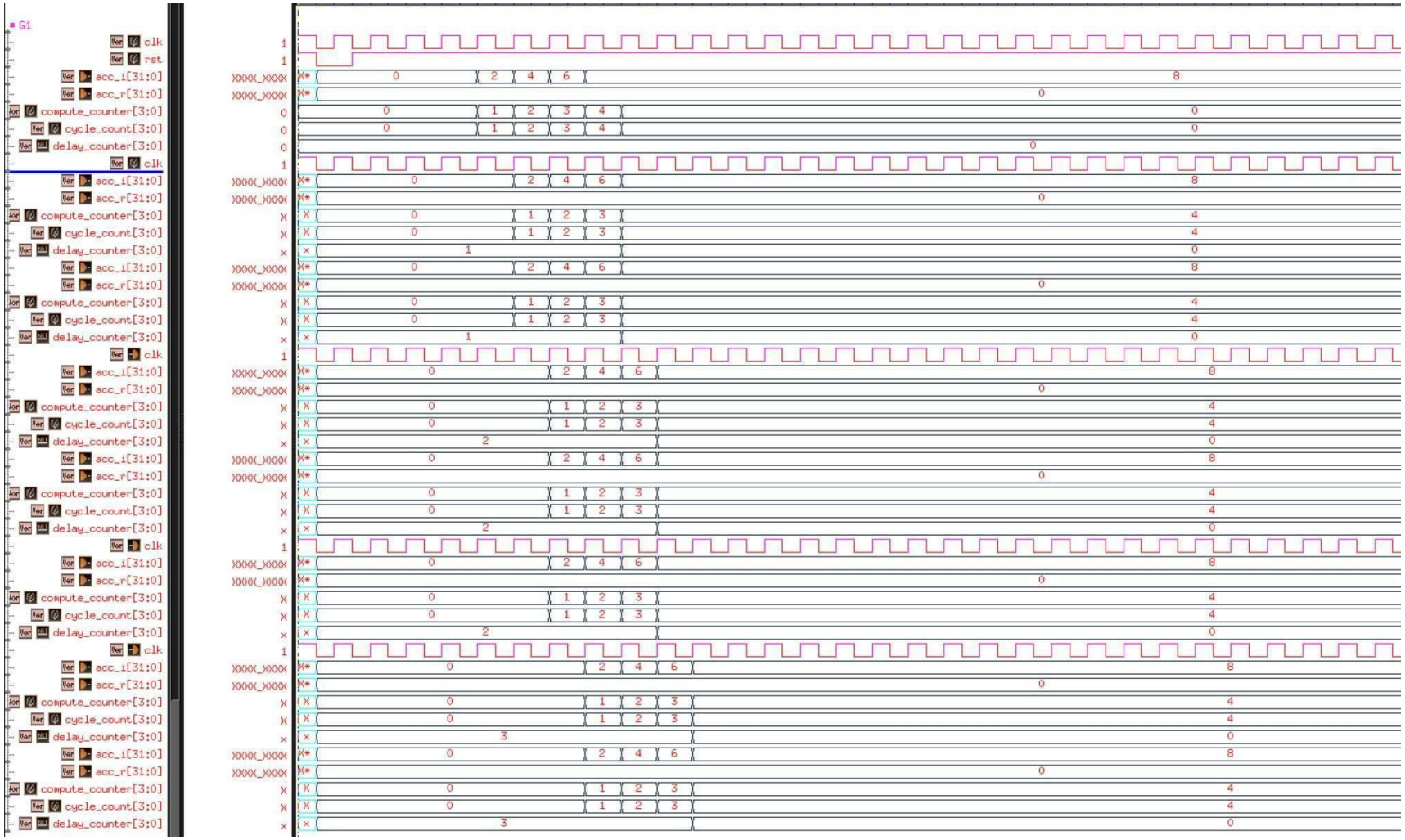

Vcs Result in fraction Test

- Block Diagram

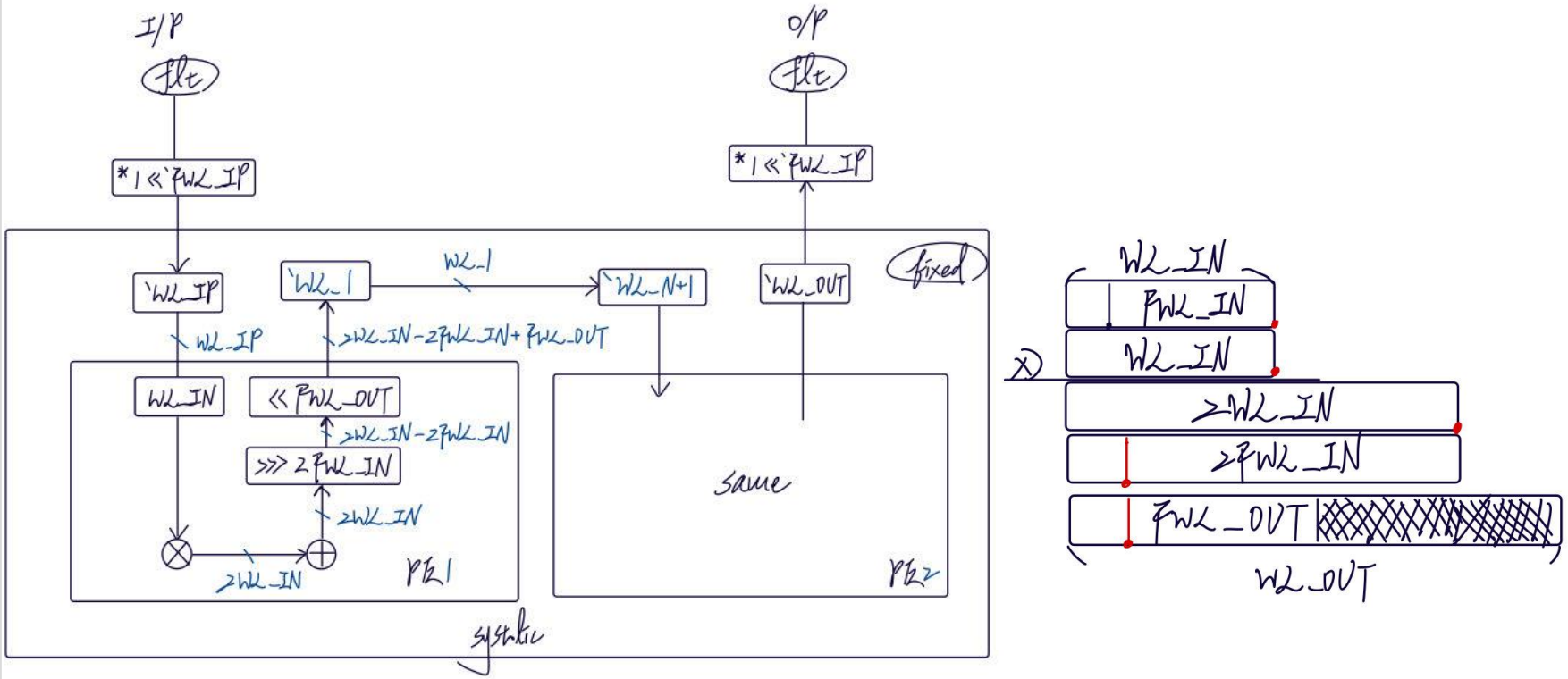

Vcs Result in fraction Test

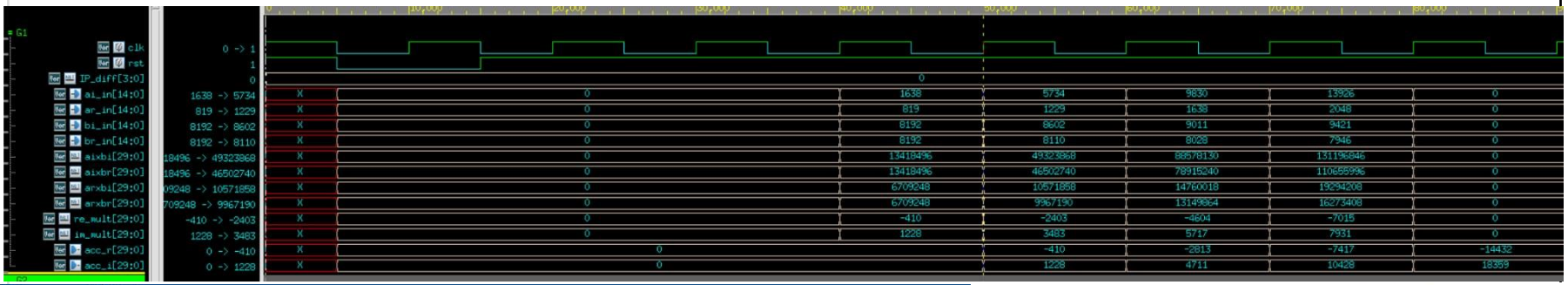

Command Window

New to MATLAB? See resources for Getting Started.

```
>> A = [0.1+0.2*1j,  0.7+0.15*1j,  1.2+0.2*1j,  1.7+0.25*1j];
B = [1.0+1.0*1j,  1.05+0.99*1j,  1.1+0.98*1j,  1.15+0.97*1j];
>> P=A.*B

P =

  -0.1000 + 0.3000i   0.5865 + 0.8505i   1.1240 + 1.3960i   1.7125 + 1.9365i

>>
```

FWL_IP = 13

$\times 2^{13}$

IP 13
+13
26
shift −14
op 12

0.1 ar_in = 819
0.2 ai_in = 1638
1.0 br_in = 8192
1.0 bi_in = 8192

-410 -2403 -4604 -7015
1228 3483 5717 7931

$\div 2^{12}$

-0.1000 -0.5867 -1.124 -1.7126
0.2998 0.8503 1.3958 1.9363

```
>> qe=P-[-0.100+0.2998*1j, 0.5867+0.8503*1j, 1.124+1.3958*1j, 1.7126+ 1.9363*1j]

qe =

   1.0e-03 *

   0.0000 + 0.2000i  -0.2000 + 0.2000i   0.0000 + 0.2000i  -0.1000 + 0.2000i

>> qe2 = norm(qe)^2;
>> qe2 = norm(qe,2)^2;
>> SQNR_dB = 10 * log10(qe2);
>> SQNR_dB

SQNR_dB =

  -66.7778
```

Synthesis

- Setting

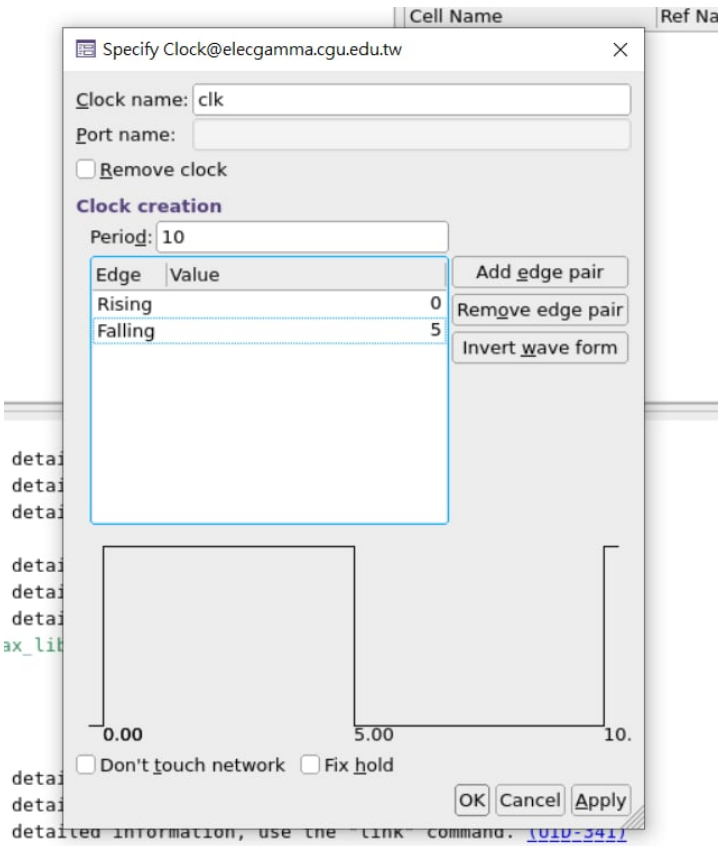

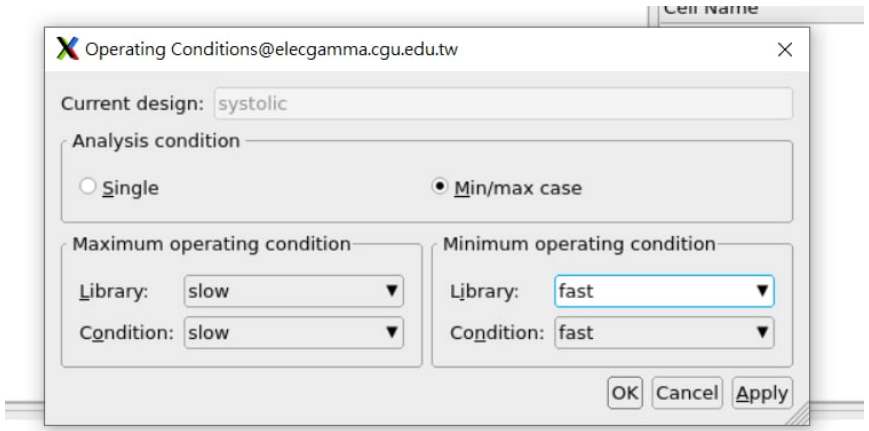

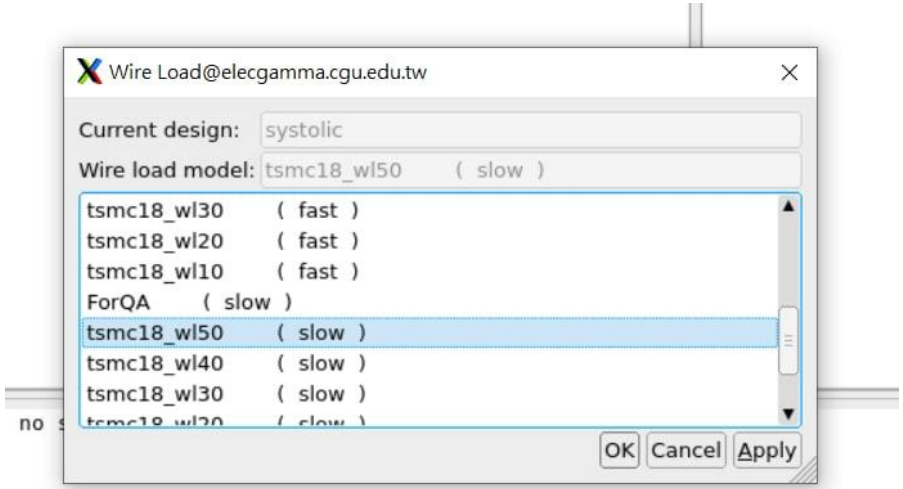

Synthesis-int

Report.1 - Area

```
****************************************
Report : area
Design : systolic
Version: U-2022.12-SP6
Date   : Tue Jun 10 20:14:17 2025
****************************************

Information: Updating design information... (UID-85)
Library(s) Used:

    slow (File: /home/MS_113/M1327204/Tech_Lib/CBDK/CBDK_TSMC018_Arm_f1.

Number of ports:                          1282
Number of nets:                           2794
Number of cells:                          1432
Number of combinational cells:             738
Number of sequential cells:                693
Number of macros/black boxes:                0
Number of buf/inv:                         144
Number of references:                       24

Combinational area:               11832.004973
Buf/Inv area:                      1307.275241
Noncombinational area:            31357.973251
Macro/Black Box area:                 0.000000
Net Interconnect area:          1363374.058701

Total cell area:                   43189.978224
Total area:                     1406564.036925
```

Report.1 - Area | Report.2 - Power

```
    Leakage Power Units = 1pW


Attributes
----------
i - Including register clock pin internal power


  Cell Internal Power  = 570.0751 uW   (20%)
  Net Switching Power  =   2.2839 mW   (80%)
                         ---------
Total Dynamic Power    =   2.8540 mW  (100%)

Cell Leakage Power     =   1.0550 uW

Information: report_power power group summary does not include estimated clock tree power. (PWR-7

                 Internal         Switching           Leakage            Total
Power Group      Power            Power               Power              Power   (   %    )  Attr
--------------------------------------------------------------------------------------------------
io_pad             0.0000           0.0000            0.0000            0.0000  (   0.00%)
memory             0.0000           0.0000            0.0000            0.0000  (   0.00%)
black_box          0.0000           0.0000            0.0000            0.0000  (   0.00%)
clock_network      0.0000           0.0000            0.0000            0.0000  (   0.00%)  i
register           0.0000           0.0000            0.0000            0.0000  (   0.00%)
sequential         0.5079           0.3429        8.0907e+05            0.8516  (  29.83%)
combinational  6.2172e-02           1.9410        2.4589e+05            2.0034  (  70.17%)
--------------------------------------------------------------------------------------------------
Total              0.5701 mW        2.2839 mW     1.0550e+06 pW         2.8550 mW
```

Synthesis-frac

Report.1 - Area

```
****************************************
Report : area
Design : systolic
Version: U-2022.12-SP6
Date   : Wed Jun 11 11:07:00 2025
****************************************

Library(s) Used:

    slow (File: /home/MS_113/M1327204/Tech_Lib/CBDK/CBDK_TSMC0

Number of ports:                          1410
Number of nets:                           3288
Number of cells:                          1774
Number of combinational cells:             912
Number of sequential cells:                861
Number of macros/black boxes:                0
Number of buf/inv:                         174
Number of references:                       25

Combinational area:               14662.771415
Buf/Inv area:                      1576.713650
Noncombinational area:            39101.832565
Macro/Black Box area:                 0.000000
Net Interconnect area:          1652242.467926

Total cell area:                  53764.603980
Total area:                     1706007.071906

Information: This design contains black box (unknown) component
```

Report.1 - Area | Report.2 - Power

```
Attributes
----------
i - Including register clock pin internal power


  Cell Internal Power  = 713.1749 uW   (21%)
  Net Switching Power  =   2.7233 mW   (79%)
                         ---------
Total Dynamic Power    =   3.4365 mW  (100%)

Cell Leakage Power     =   1.3115 uW

Information: report_power power group summary does not include estimated clock tree power. (PWR-7

                 Internal         Switching           Leakage            Total
Power Group      Power            Power               Power              Power   (   %    )  Attr
--------------------------------------------------------------------------------------------------
io_pad             0.0000           0.0000            0.0000            0.0000  (   0.00%)
memory             0.0000           0.0000            0.0000            0.0000  (   0.00%)
black_box          0.0000           0.0000            0.0000            0.0000  (   0.00%)
clock_network      0.0000           0.0000            0.0000            0.0000  (   0.00%)  i
register           0.0000           0.0000            0.0000            0.0000  (   0.00%)
sequential         0.6342           0.4285        1.0081e+06            1.0637  (  30.94%)
combinational  7.8973e-02           2.2949        3.0347e+05            2.3742  (  69.06%)
--------------------------------------------------------------------------------------------------
Total              0.7132 mW        2.7234 mW     1.3115e+06 pW         3.4378 mW

***** End Of Report *****
```

Synthesis

Report.1 | Report.2 | Report.3 | Report.4 | Report.5 | Report.6

```
Startpoint: cycle_cnt_reg[0]
            (rising edge-triggered flip-flop clocked by clk)
Endpoint: ar_41_reg_reg[10]
          (rising edge-triggered flip-flop clocked by clk)
Path Group: clk
Path Type: max

Des/Clust/Port     Wire Load Model       Library
------------------------------------------------
systolic           tsmc18_wl50           slow

Point                                    Incr       Path
-----------------------------------------------------------
clock clk (rise edge)                    0.00       0.00
clock network delay (ideal)              0.00       0.00
cycle_cnt_reg[0]/CK (DFFRHQX4)           0.00       0.00 r
cycle_cnt_reg[0]/Q (DFFRHQX4)            0.64       0.64 f
U1529/Y (INVX1)                          1.41       2.04 r
U1536/Y (NOR4BX4)                        0.49       2.53 f
U1539/Y (NAND2XL)                        1.24       3.77 r
U1528/Y (CLKINVX3)                       0.94       4.71 f
U1679/Y (INVX1)                          1.09       5.79 r
U1614/Y (CLKINVX3)                       1.91       7.70 f
U1858/Y (AOI222X1)                       1.37       9.06 r
U1856/Y (NAND2X1)                        0.51       9.57 f
ar_41_reg_reg[10]/D (DFFRHQXL)           0.00       9.57 f
data arrival time                                   9.57

clock clk (rise edge)                   10.00      10.00
clock network delay (ideal)              0.00      10.00
ar_41_reg_reg[10]/CK (DFFRHQXL)          0.00      10.00 r
library setup time                      -0.35       9.65
data required time                                  9.65
-----------------------------------------------------------
data required time                                  9.65
data arrival time                                  -9.57
-----------------------------------------------------------
slack (MET)                                         0.08
```

```
****************************************
Report : design
Design : systolic
Version: U-2022.12-SP6
Date   : Wed Jun 11 11:10:29 2025
****************************************

Design allows ideal nets on clock nets.

Library(s) Used:

    slow (File: /home/MS_113/M1327204/Tech_Lib/CBDK/CBDK_TSM

Local Link Library:

    {slow.db, fast.db, typical.db}

Flip-Flop Types:

    No flip-flop types specified.

Latch Types:

    No latch types specified.

Operating Conditions:


    Operating Condition Name : slow
    Library : slow
```

THX for Listening